General Notes:

1) Material:
   A) Material to be commercial quality Mill Galvanized Steel per ASTM A924 W/ G-60 Coating. Min Yield= 33 KSI
2) Dimensional Tolerances
   A) General: ± 1/16"
   B) Length: ± 1/16"
   C) Width: ± 1/16"
   D) Slot Location: ± 1/32"
   E) Angularity: ± 2°
3) All Units Inches
4) Material Thickness (Now): 16 GA. GL = .0635"

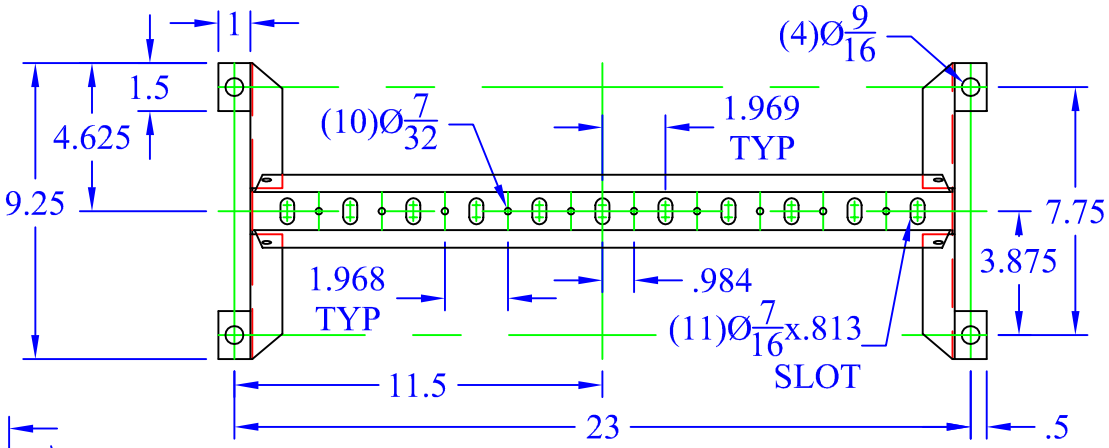

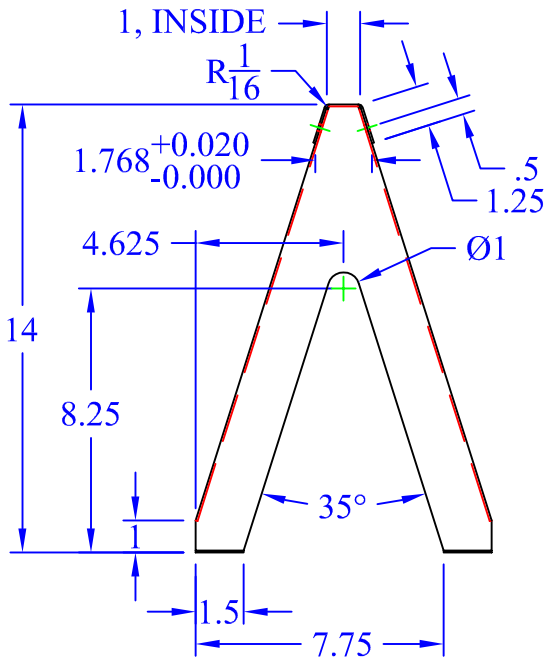

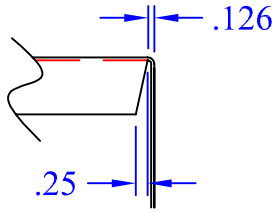

VIEW A-A
SCALE:3"=1'

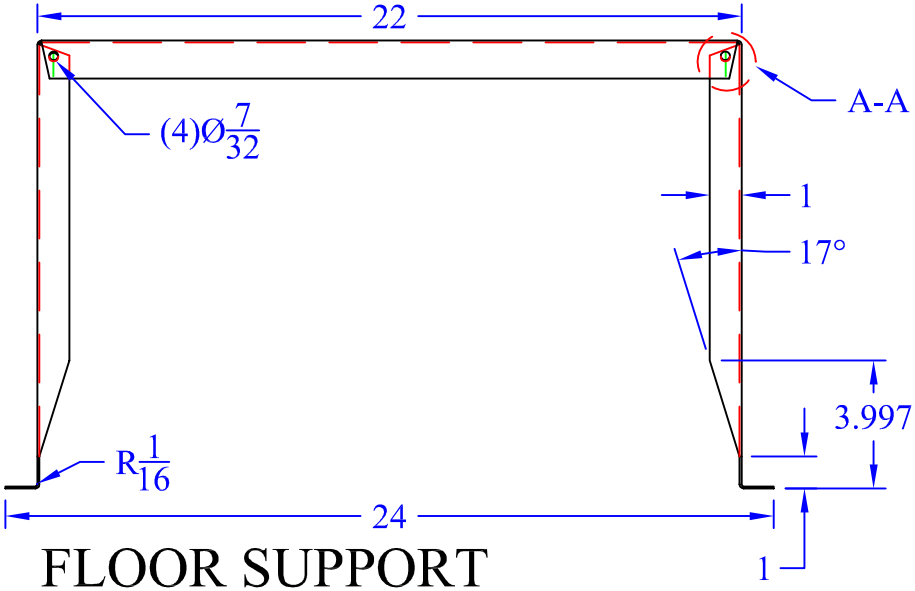

FLOOR SUPPORT
SCALE:2"=1'

This drawing in design and detail is the property of WBT, LLC. and must not be used except in connection with our work. All rights of design or invention are reserved.

PART # OR NAME	DRAWN BY
WBTUS14	RJM

SIZE	DATE	SCALE	SHEET	REV
A	9/17/15	VARIES	1 OF 1	N/A